



COB DOWNLIGHT 30W SERIES 4530F LOOX

OVERVIEW

This round recessed downlight directs light onto displays and surfaces below. Its deep black baffle helps shield the light source from side views, while the white trim sits flush with the ceiling. It suits accent lighting in retail, hospitality, and residential interiors.

PRODUCT VARIANTS & TECHNICAL DATA

Code	Type / Description	Wattage(W)	Total Luminous Flux(lm)	Luminous Efficacy(lm/W)	Power Factor(pf)	Beam Angle	CRI (Ra)	IP Rating
LDO230C0303 LDO230C0304 LDO230C0306	2700K / 4000K / 6500K, Chrome Black, Down Light, Loox	30W	2550	85	>0.5	50°	>80	40

TECHNICAL INFORMATION

Frequency(Hz)	50-60
Input Voltage(VAC)	180-265
Life Span(Hrs)	50000
SDCM	<5
Ambient Temperature(Ta)	-20℃+55℃
Operating Temperature	-20℃+45℃
Product Face Size (mm)	φ220*H73
Product Weight (gr)	650
Energy Usage	A++
Lumen Maintenance(L70)	2550

INSTRUCTION

Instruction Manual	

PHOTOMETRIC DIAGRAMS

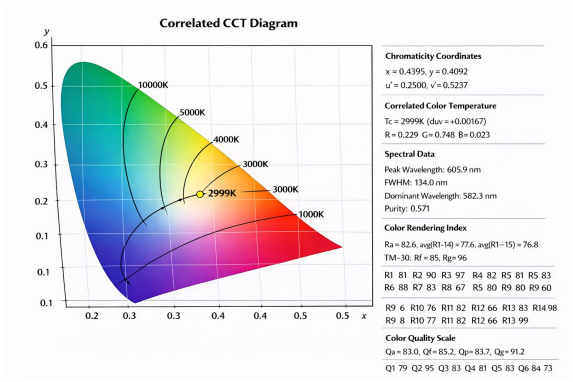

Chromaticity / CCT diagram

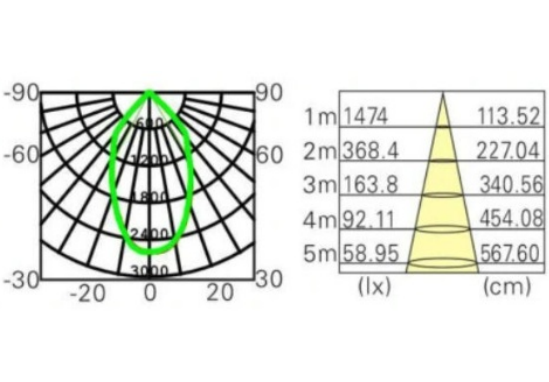

Beam angle / polar diagram

DIMENSION DRAWINGS

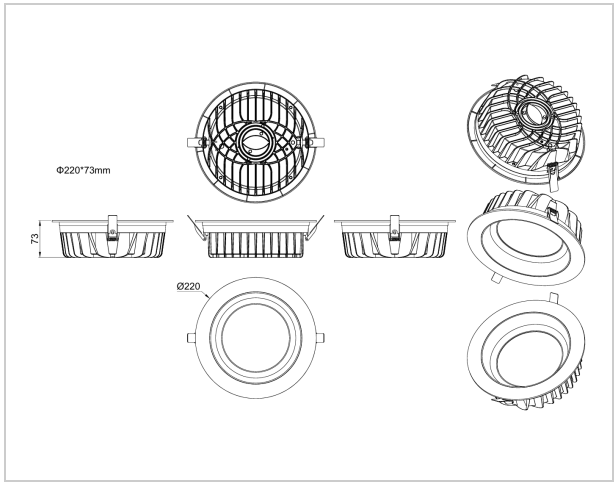

GENERAL INFORMATION

Body Material	Aluminum
Diffuser	
Reflector	Changeable
Mounting Type	Recessed
Cut Size	Φ200mm
Driver Brand	Loox/Eaglerise/Lifud
Chip Brand	Osram/Epistar
LED Type	COB

APPLICATION AREAS

- Retail Stores & Showrooms: material sample counters, product display islands
- Hotels & Hospitality: reception desks, lobby display tables, and guest-room minibar counters
- Residential Interiors: entryway consoles, built-in display niches, dining-room sideboards










