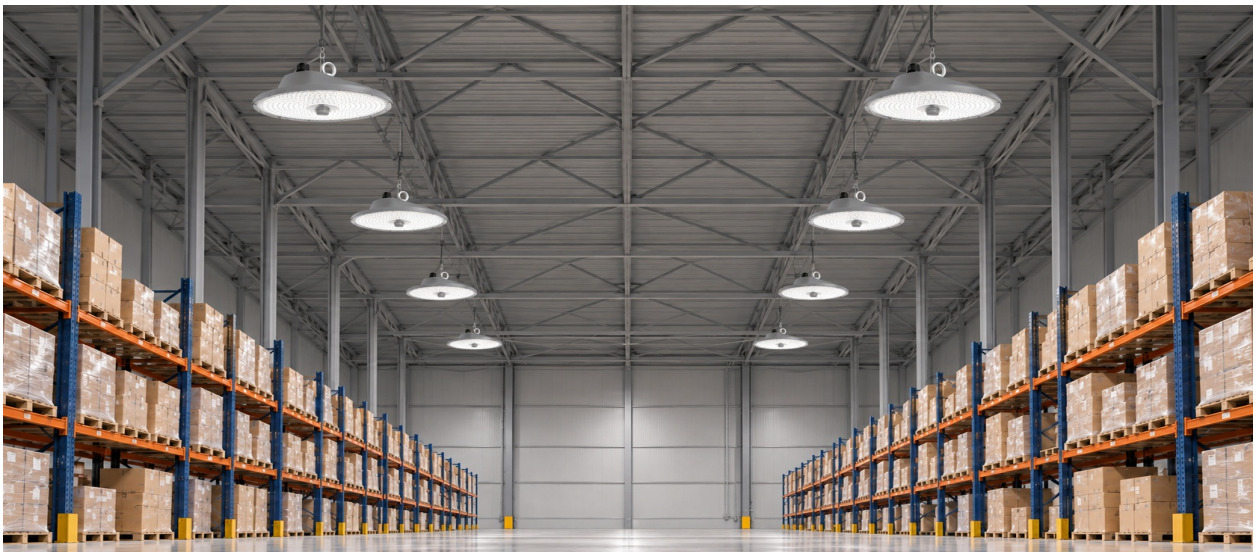







ADJUSTABLE UFO HIGH BAY 6 WATTAGES(100W/120W/140W/160W/180W/200W) PHILIPS DESIGN LOOX PLUS

OVERVIEW

An adaptable industrial lighting solution designed for large indoor spaces with elevated mounting heights. It delivers broad and consistent illumination to support clear visibility across demanding work areas. Its main advantage is adjustable light output, allowing one solution to suit different layouts, activities and ceiling heights. Ideal for factories, warehouses, logistics centers, production halls and large workshops.

PRODUCT VARIANTS & TECHNICAL DATA

Code	Type / Description	Wattage(W)	Total Luminous Flux(lm)	Luminous Efficacy(lm/W)	Power Factor(pf)	Beam Angle	CRI (Ra)	IP Rating
LIU62DM2009 LIU62DM2003 LIU62DM2004 LIU62DM2006	3CCT DIP Switch / 3000K / 4000K / 6500K, Highbay Light, Dimmable Driver	200W	40000	200	>0.9	90°	80	69

INSTRUCTION

Instruction Manual	

PHOTOMETRIC DIAGRAMS

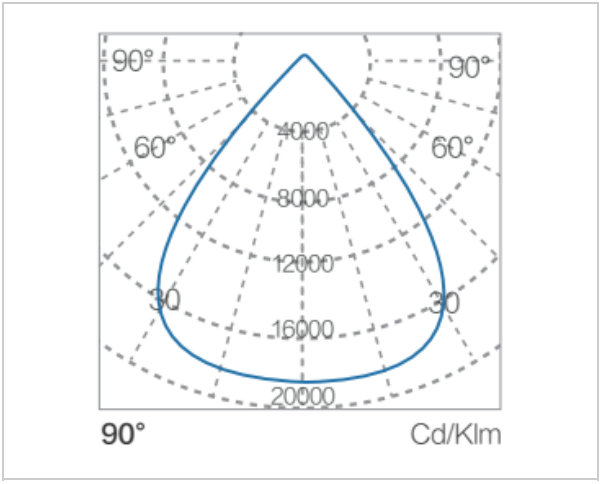

Beam angle / polar diagram

DIMENSION DRAWINGS

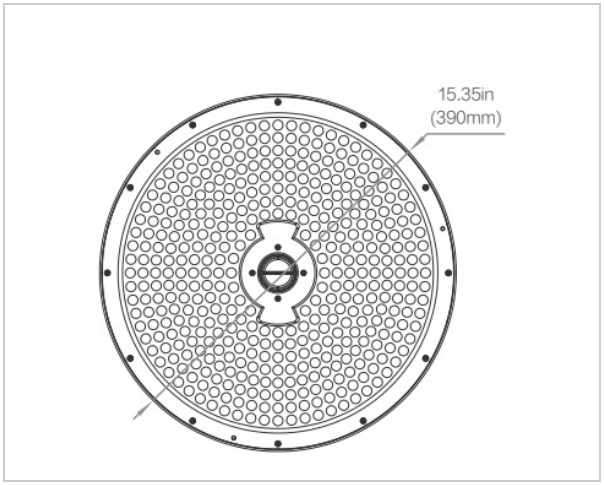

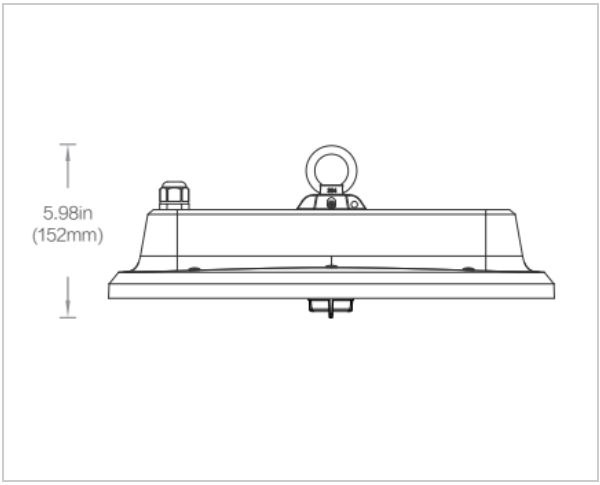

GENERAL INFORMATION

Body Material	Aluminum
Mounting Type	Suspended/Surface
Driver Brand	Sosen
Chip Brand	Liteon
Light Source	SMD

APPLICATION AREAS

- Warehouses & Logistics Centers: Storage aisles, loading zones and distribution halls
- Workshops & Maintenance Facilities: Large service bays, repair areas and high-ceiling workspaces
- Industrial & Storage Facilities: Factories, production halls and assembly areas