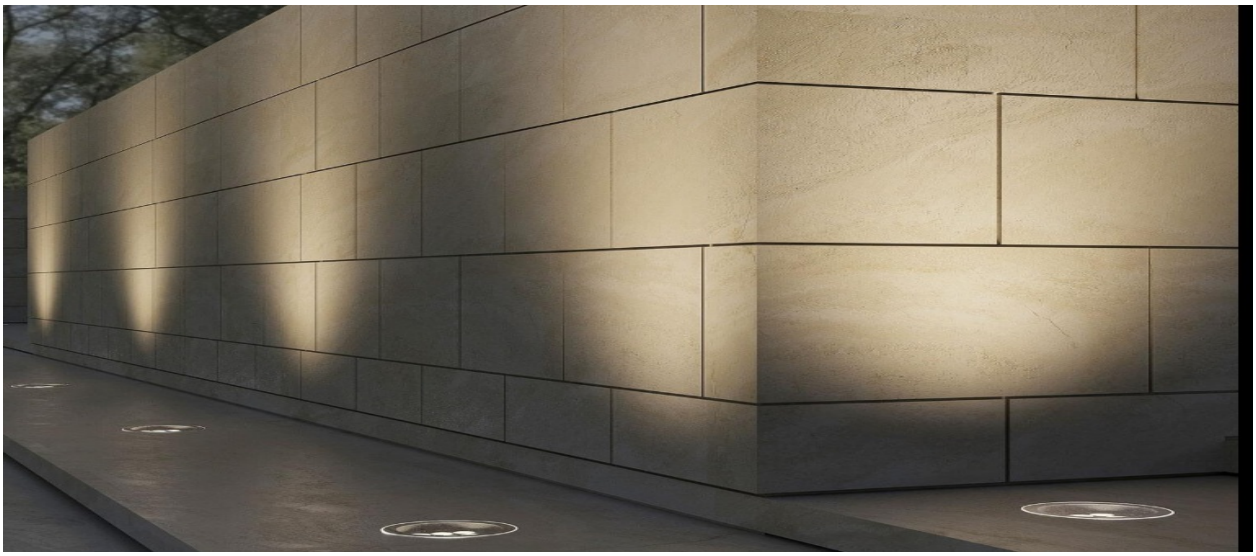



UNDER GROUND LIGHT 5W LOOX

OVERVIEW

High-performance recessed underground LED light designed for outdoor architectural and landscape illumination. Suitable for gardens, pathways, building facades, trees, driveways, parks, and commercial outdoor applications. The fixture is installed flush with the ground, providing elegant upward lighting while maintaining a clean appearance.

DIMENSION DRAWINGS

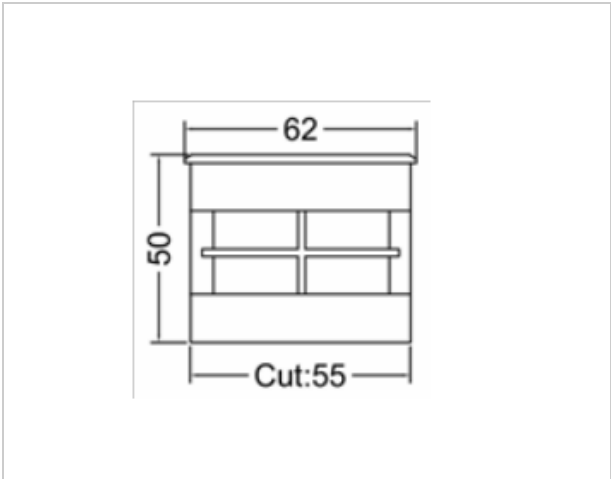


5
YEARS
GUARANTEE



ISO
9001:2015



صنع في عُمان
Made in Oman

RoHS
