



SURFACE PANEL 35W FORTO SERIES LOOX

OVERVIEW

Features:

- High-efficiency LED surface panel with uniform light distribution.
- High color Rendering Index

PRODUCT VARIANTS & TECHNICAL DATA

Code	Type / Description	Wattage(W)	Total Luminous Flux(lm)	Luminous Efficacy(lm/W)	Power Factor(pf)	Beam Angle	CRI (Ra)	IP Rating
LPP2FTLR353 LPP2FTLR354 LPP2FTLR356	3000K / 4000K / 6500K, Black, Panel Light	35	3150	90	>0.5	120°	>80	20

TECHNICAL INFORMATION

Frequency(Hz)	50
Input Voltage(V)	185-265
Life Span(Hrs)	25000
IK	
Surge Protection(KV)	
Protection class	
SDCM	<6
Sensor	No
Ambient temperature(Ta)	
Operating temperature	
UGR	
Product Face Size (mm)	233*42
Product Weight (gr)	501
Energy Usage	A+
Lumen Maintenance(lm)	3150

INSTRUCTION

Instruction Manual	

PHOTOMETRIC DIAGRAMS

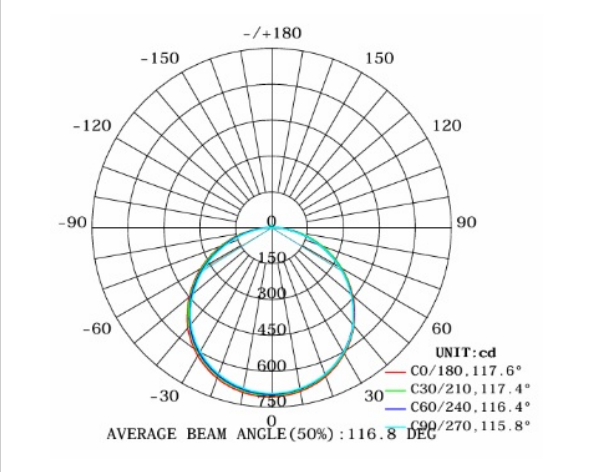

Beam angle / polar diagram

DIMENSION DRAWINGS

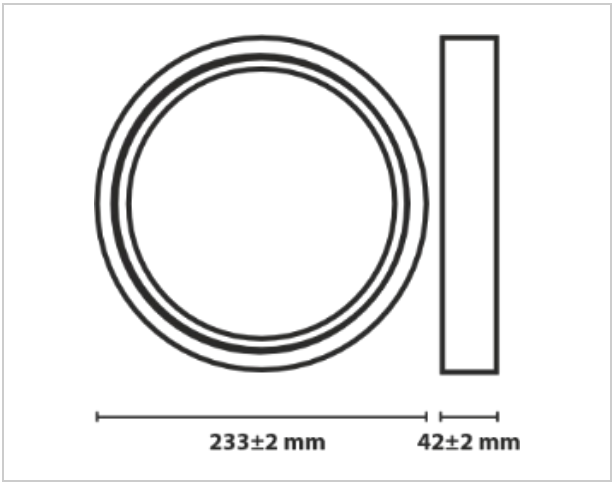

GENERAL INFORMATION

Body Material	Iron
Diffuser	PP
Reflector	
Mounting Type	Surface
Cut Size	
Driver Brand	
Chip Brand	
LED Type	

APPLICATION AREAS

- Schools
- Car Parking
- Warehouses
- Residential Building
- Commerical Buildings