

COB ANTI-GLARE DOWNLIGHT 10W LUMINATION

OVERVIEW

This Anti-Glare Recessed Downlight is designed for architectural lighting, using a deep optical system to reduce direct glare and provide balanced illumination with improved visual comfort. Its clean recessed design makes it ideal for hotels, retail and showrooms, offices and commercial interiors where lighting quality and ceiling integration are important.

PRODUCT VARIANTS & TECHNICAL DATA

Code	Type / Description	Wattage(W)	Total Luminous Flux(lm)	Luminous Efficacy(lm/W)	Power Factor(pf)	Beam Angle	CRI (Ra)	IP Rating
UPD2GLL1103 UPD2GLL1104 UPD2GLL1106	3000K / 4000K / 6500K, Black, Black, Down Light	10	750	75	>0.5	120°	>80	20

TECHNICAL INFORMATION

Frequency(Hz)	50-60
Input Voltage(VAC)	220-260
Life Span(Hrs)	25000
Sensor	No
Product Face Size (mm)	90x53
Product Weight (gr)	97.5
Energy Usage	A+
Lumen Maintenance(L70)	750

PHOTOMETRIC DIAGRAMS

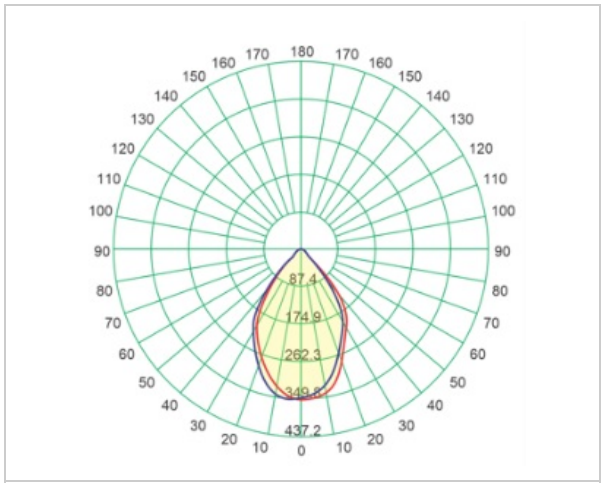

Beam angle / polar diagram

DIMENSION DRAWINGS

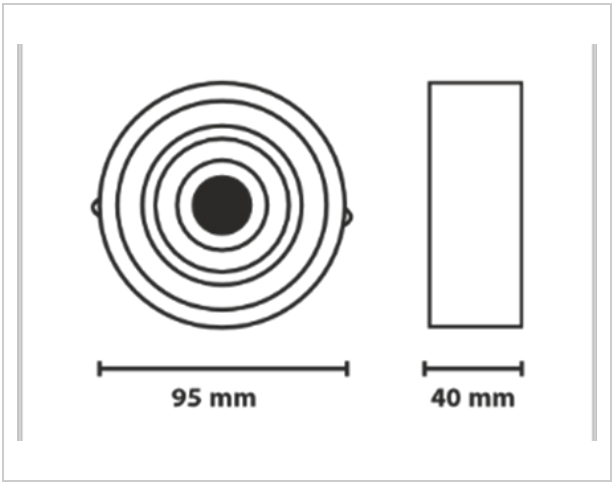

GENERAL INFORMATION

Body Material	Iron
Diffuser	PC
Mounting Type	Recessed
Cut Size	70

APPLICATION AREAS

- Architectural Materials Showroom — Sample consultation islands, finish comparison tables.
- Retail Store — Product display tables, demonstration counters, checkout counters.
- Hotel — Reception counters, lobby display tables, lounge seating areas