



WALL LIGHT 60W MILKY LUXARO SERIES OMILEX

OVERVIEW

This Oval bulkhead wall light is a durable and efficient lighting solution for both indoor and outdoor use.
With an IP65 rating, it is well-protected against dust and moisture. It it provides bright, uniform illumination suitable for general-purpose lighting.

PRODUCT VARIANTS & TECHNICAL DATA

Code	Type / Description	Wattage(W)	Luminous Efficacy(lm/W)	Power Factor(pf)	Beam Angle	CRI (Ra)	IP Rating
OPW4UK30606	6500K, OVAL, Prismatic, Wall Light	60	100	>0.5	180°	>80	65

TECHNICAL INFORMATION

Frequency(Hz)	50
Input Voltage(V)	220-260
Life Span(Hrs)	15000
IK	
Surge Protection(KV)	
Protection Class	
SDCM	
Sensor	No
Ambient Temperature(Ta)	-20 , +50
Operating Temperature	-20 , +50
UGR	
Product Face Size (mm)	256*127*55
Product Weight (gr)	245
Energy Usage	A
Lumen Maintenance(lm)	

PHOTOMETRIC DIAGRAMS

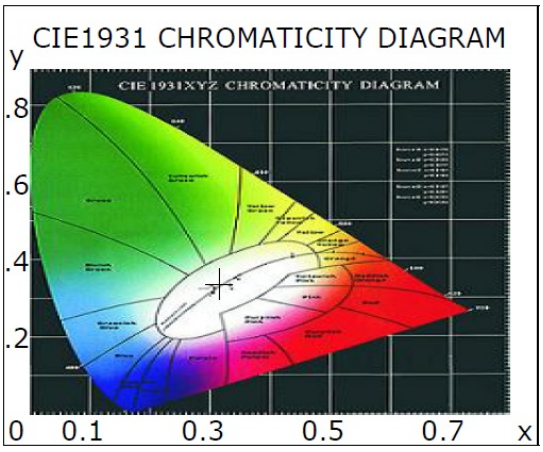

Chromaticity / CCT diagram

DIMENSION DRAWINGS

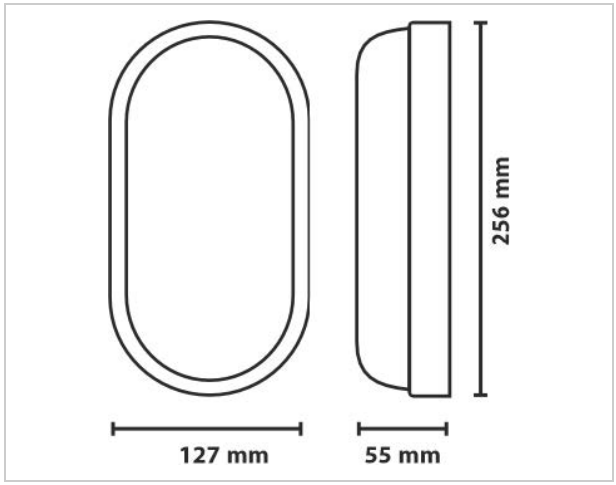

GENERAL INFORMATION

Body Material	PP
Diffuser	
Reflector	
Mounting Type	Wall Mounted
Cut Size(mm)	
Driver Brand	
Chip Brand	
LED Type	

APPLICATION AREAS

- Schools
- Car Parking
- Warehouses
- Residential Building
- Commerical Buildings
- Garages and Workshops
- Industrial & Storage Facilities

ISO 9001:2005 CE ISO 14001:2015