



T BULB 12W SR1 LOOX

OVERVIEW

12W LED Tubular Light High-efficiency LED tube delivering 1080 lumens of bright, consistent light.
Designed as a reliable and energy-saving replacement for traditional fluorescent tubes.
Features instant start, long lifespan, and a 3-year warranty.

PRODUCT VARIANTS & TECHNICAL DATA

Code	Type / Description	Wattage(W)	Total Luminous Flux(lm)	Luminous Efficacy(lm/W)	Power Factor(pf)	Beam Angle	CRI (Ra)	IP Rating
LLTSR200123 LLTSR200124 LLTSR200126	LOOX, 2700K / 4000K / 6500K, E27, Bulb Light	12	1080	90	>0.5	270°	>80	20

TECHNICAL INFORMATION

Frequency(Hz)	50
Input Voltage(V)	180-265
Life Span(Hrs)	25000
IK	
Surge Protection(KV)	
Protection Class	
SDCM	<3
Sensor	No
Ambient Temperature(Ta)	
Operating Temperature	
UGR	
Product Face Size (mm)	135*43
Product Weight (gr)	34
Energy Usage	A+
Lumen Maintenance(lm)	1080

PHOTOMETRIC DIAGRAMS

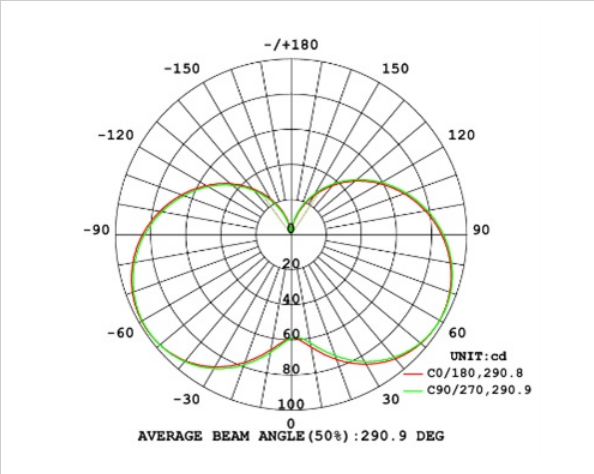

Beam angle / polar diagram

DIMENSION DRAWINGS

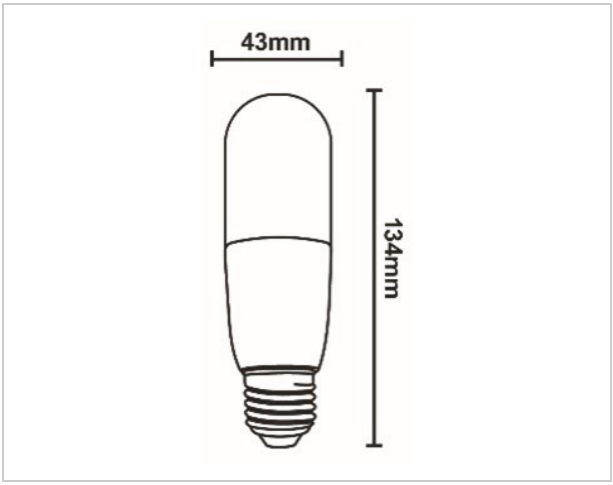

GENERAL INFORMATION

Body Material	PBT + PC
Diffuser	
Reflector	
Mounting Type	Socket
Cut Size(mm)	
Driver Brand	
Chip Brand	
LED Type	

APPLICATION AREAS

- Schools
- Car Parking
- Warehouses
- Residential Building
- Commerical Buildings







