

EXPLOSION PROOF HIGH BAY LIGHT 100W EX-B SERIES ZONE 2 LOOX

OVERVIEW

A durable lighting solution designed for hazardous and demanding industrial environments. It provides dependable illumination to improve visibility and support safer operations. Its main advantage is reliable performance under harsh operating conditions, making it suitable for designated Zone 2 areas across oil, gas, petrochemical and marine facilities.

PRODUCT VARIANTS & TECHNICAL DATA

Code	Type / Description	Wattage(W)	Total Luminous Flux(lm)	Luminous Efficacy(lm/W)	CRI (Ra)	IP Rating	Emergency Back up	Zone
LIEHB2G1005	5000k, Gray, Explosion Proof Lights	100W	13000	130	>70	66	3 Hours	2

TECHNICAL DATA

Frequency	50/60
Input Voltage	200-250
Life Span	
IK	
Surge Protection	
Protection class	
SDCM	<6
Warranty	5
Ambient temperature(Ta)	
Operating temperature	
Product Face Size (mm)	450x362x241
Product Weight (gr)	55800
Energy Usage	
Lumen Maintenance	
THD	
Power Factor	
Beam Angle	D40=40°; D60=60°; D90=90°; D120=120°

MATERIALS / TYPE

Body	Aluminum
Diffuser	falt glass, globe glass, PC
Reflector	
Mounting Type	Surface Mount ,Stanchion Mount ,Wall Mount
Cable & Gland Type	
Driver Brand	
Chip Brand	

INSTRUCTION

Instruction Manual	

PHOTOMETRIC DIAGRAMS

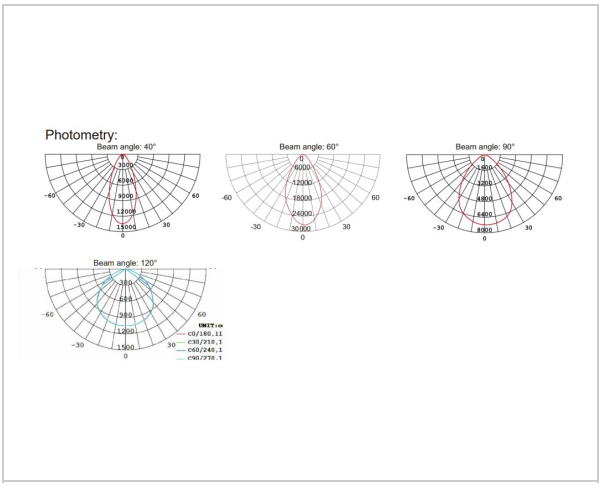

Beam angle / polar diagram

DIMENSION DRAWINGS

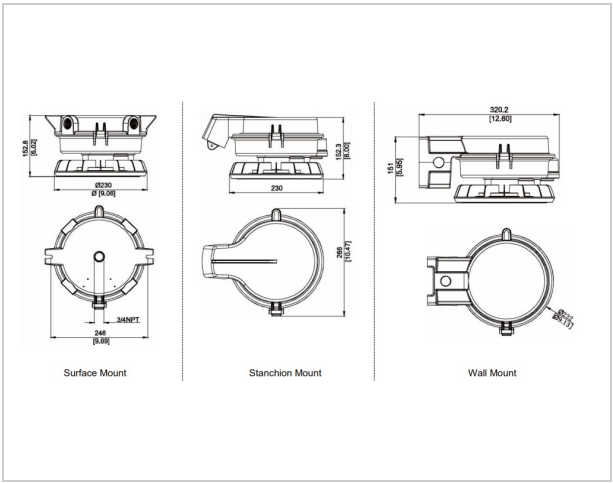

APPLICATION AREAS

- Oil & Gas Processing Facilities: Designated Zone 2 perimeters around release sources and well-ventilated utility areas
- Refineries & Petrochemical Plants: Designated Zone 2 pipe-rack corridors, maintenance access areas and tank-farm perimeters
- Marine & Industrial Facilities: Designated Zone 2 open decks, service walkways and loading-support areas
- Metal treatment
- Other high humidity, high dust, high temperature, vapor locations



