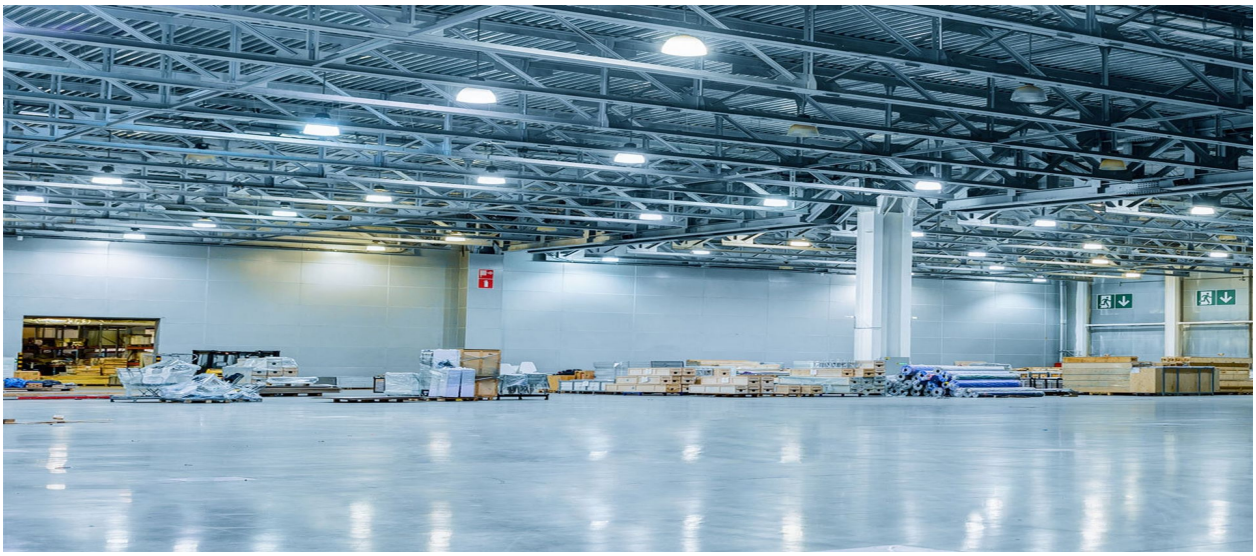



T BULB 80W OMILEX

OVERVIEW

-The 80W T-Bulb offers bright, energy-efficient lighting with a compact tubular design. It delivers wide light coverage, making it suitable for areas that require strong and consistent illumination.

PRODUCT VARIANTS & TECHNICAL DATA

Code	Type / Description	Wattage(W)	Luminous Efficacy(lm/W)	Power Factor(pf)	Beam Angle	CRI (Ra)	IP Rating
OLT14200803 OLT14200806	2700K / 6500K, Bulb Light	80	110	>0.5	220°	>70	20

TECHNICAL INFORMATION

Frequency(Hz)	50
Input Voltage(V)	220-260
Life Span(Hrs)	15000
IK	
Surge Protection(KV)	
Protection Class	
SDCM	<6
Sensor	No
Ambient Temperature(Ta)	
Operating Temperature	
UGR	
Product Face Size (mm)	140*215
Product Weight (gr)	170
Energy Usage	A
Lumen Maintenance(lm)	

DIMENSION DRAWINGS

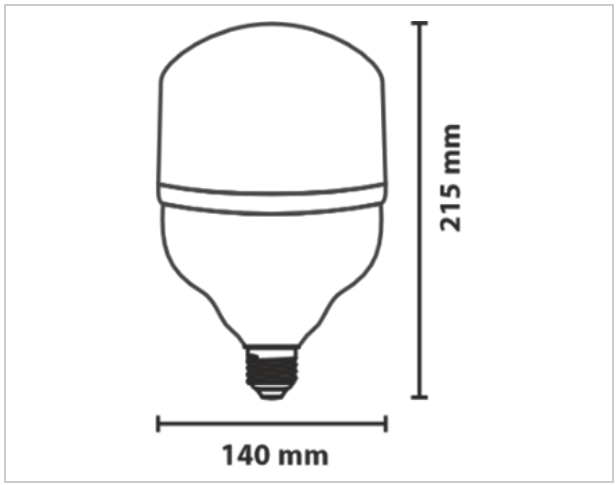

GENERAL INFORMATION

Body Material	PBT coated aluminum+ PP cover
Diffuser	
Reflector	
Mounting Type	Socket
Cut Size(mm)	
Driver Brand	
Chip Brand	
LED Type	

APPLICATION AREAS

- Schools
- Car Parking
- Warehouses
- Residential Building
- Commerical Buildings
- Garages and Workshops
- Industrial & Storage Facilities

1 YEARS GUARANTEE
ISO 9001:2005
ISO 14001:2015
CE