



SPOT LIGHT 12W MODULE MR16-GU10 CLEAR LENS LUMINATION

OVERVIEW

The MR-16 GU10 Spotlight is a compact, energy-efficient lighting solution designed for directional and accent lighting. It features a standard GU10 base and emits focused light, making it ideal for highlighting specific areas or objects in both residential and commercial environments.

PRODUCT VARIANTS & TECHNICAL DATA

Code	Type / Description	Wattage(W)	Total Luminous Flux(lm)	Luminous Efficacy(lm/W)	Power Factor(pf)	Beam Angle	CRI (Ra)	IP Rating
ULUC0L00127 ULUC0L00123 ULUC0L00124 ULUC0L00126	Black, 3CCT / 3000K / 4000K / 6500K, Spot Light	12	1250	104	>0.5	36°	>80	20

TECHNICAL INFORMATION

Frequency(Hz)	50-60
Input Voltage(VAC)	220-260
Life Span(Hrs)	25000
IK	
Surge Protection(KV)	
Protection class	
SDCM	4>
Sensor	No
Ambient temperature(Ta)	-20° , +50°
Operating temperature	-20° , +50°
UGR	
Product Face Size (mm)	50*40
Product Weight (gr)	130
Energy Usage	A
Lumen Maintenance(lm)	1250

DIMENSION DRAWINGS

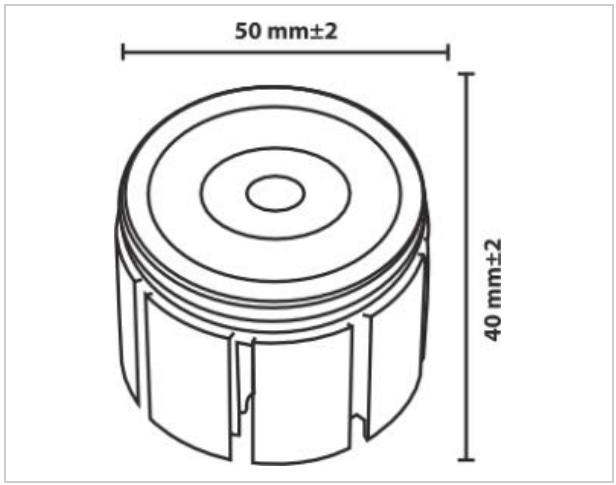

GENERAL INFORMATION

Body Material	Aluminum + Pc
Diffuser	
Reflector	
Mounting Type	Recessed
Cut Size	
Driver Brand	
Chip Brand	
LED Type	

APPLICATION AREAS

- Retail Store — Merchandise display tables, display plinths, checkout counters.
- Hotel — Reception counters, lobby display tables, guest-room luggage benches
- Residential — Entryway consoles, kitchen islands, decorative display niches.
- Garages and Workshops
- Industrial & Storage Facilities
- Residential Building
- Commercial Building

2 YEARS GUARANTEE
ISO 9001:2005
CE
ISO 14001:2015