



COB DOWNLIGHT 10W LUMINATION

OVERVIEW

A round recessed LED fixture that directs light downward onto selected surfaces. The reflector helps concentrate light where it’s needed, while the flush trim keeps the ceiling uncluttered. It suits retail displays, hospitality counters, and residential accent lighting.

PRODUCT VARIANTS & TECHNICAL DATA

Code	Type / Description	Wattage(W)	Total Luminous Flux(lm)	Luminous Efficacy(lm/W)	Power Factor(pf)	Beam Angle	CRI (Ra)	IP Rating
UPD20010103 UPD20010106	Lumination, 2700K / 6500K, Down Light	10	650	65	>0.5	120°	>70	20

TECHNICAL INFORMATION

Frequency(Hz)	50-60
Input Voltage(VAC)	220-260
Life Span(Hrs)	25000
Sensor	No
Ambient temperature(Ta)	-20° , +50°
Operating temperature	-20° , +50°
Product Face Size (mm)	126x45
Product Weight (gr)	100
Energy Usage	A+
Lumen Maintenance(lm)	650

DIMENSION DRAWINGS

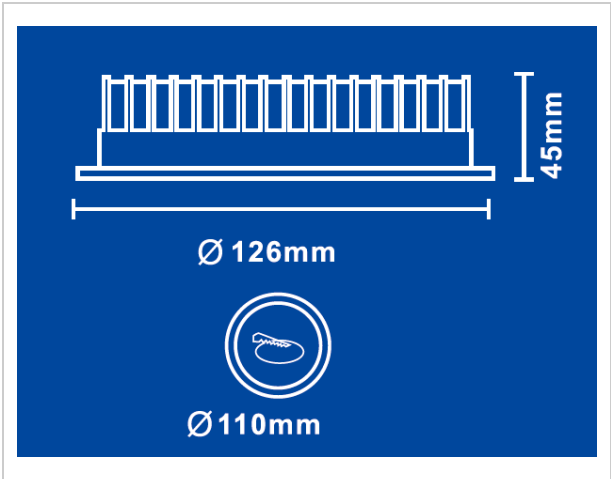

GENERAL INFORMATION

Body Material	Die-Cas Aluminum
Diffuser	PC
Mounting Type	Recessed
Cut Size	110
LED Type	COB

APPLICATION AREAS

- Retail Store — Merchandise display tables, display plinths, checkout counters.
- Hotel — Reception counters, lobby display tables, guest-room luggage benches
- Residential — Entryway consoles, kitchen islands, decorative display niches.