



LINEAR SPOT LIGHT 10W LOOX PRO

OVERVIEW

A linear spotlight with a 3CCT DIP switch is a sleek, elongated LED fixture that not only delivers even, modern
illumination but also lets you switch between three preset color temperatures (warm, neutral, cool) using a
built-in dip switch for flexible lighting in one unit.

PRODUCT VARIANTS & TECHNICAL DATA

Code	Type / Description	Wattage(W)	Total Luminous Flux(lm)	Luminous Efficacy(lm/W)	Power Factor(pf)	Beam Angle	CRI (Ra)	IP Rating
LLS00L0107 LLS00L0103 LLS00L0104 LLS00L0106	Black, 3CCT DIP Switch / 3000K / 4000K / 6500K	10	900	90	>0.5	24°	77	20

TECHNICAL INFORMATION

Frequency(Hz)	60
Input Voltage(VAC)	175-265
Life Span(Hrs)	25000
IK	
Surge Protection(KV)	
Protection class	
SDCM	<2
Sensor	
Warranty	3 years
Ambient temperature(Ta)	
Operating temperature	
UGR	
Product Face Size (mm)	148*45*40
Product Weight (gr)	158
Energy Usage	A+
Lumen Maintenance(lm)	900

PHOTOMETRIC DIAGRAMS

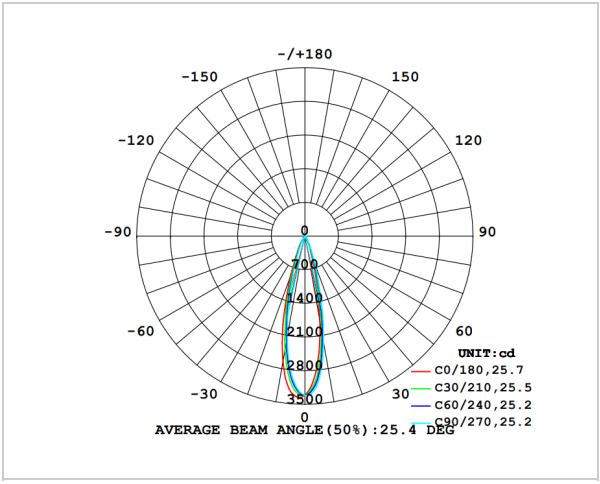

Beam angle / polar diagram

DIMENSION DRAWINGS

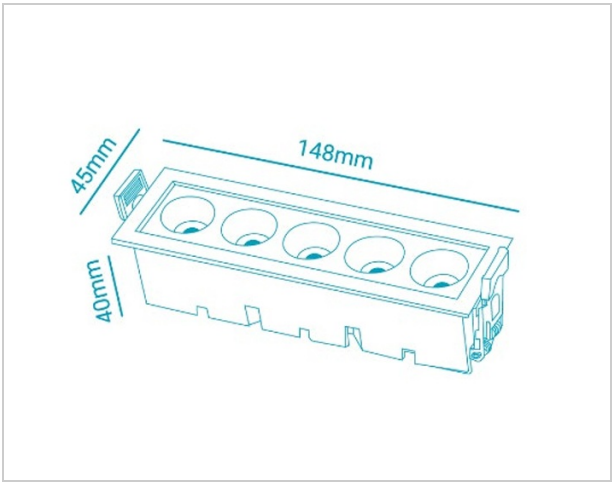

GENERAL INFORMATION

Body Material	Die-cast Aluminium Housing + PC Cover
Diffuser	
Reflector	
Mounting Type	Recessed
Cut Size	
Driver Brand	
Chip Brand	
LED Type	

APPLICATION AREAS

- Retail Store — Merchandise display tables, display plinths, checkout counters.
- Hotel — Reception counters, lobby display tables, guest-room luggage benches
- Residential — Entryway consoles, kitchen islands, decorative display niches.
- Residential Building
- Commercial Building

3 YEARS GUARANTEE
ISO 9001:2005
ISO 14001:2015
CE