

8W DOUBLE COLOR DOWNLIGHT LOOX

OVERVIEW

A recessed ceiling fixture with a central downlight and an amber accent ring. The center provides directed light for small areas, while the ring adds a warm decorative glow. Combining both in one fitting keeps the ceiling uncluttered. It suits café seating, hotel guest rooms, and residential entryways.

PRODUCT VARIANTS & TECHNICAL DATA

Code	Type / Description	Wattage(W)	Total Luminous Flux(lm)	Luminous Efficacy(lm/W)	Power Factor(pf)	Beam Angle	CRI (Ra)	IP Rating
LPD6C1008O3 LPD6C1008O4 LPD6C1008O6	3000K + Orange / 4000K + Orange / 6500K + Orange, Down Light	8	800	100	>0.5	25°	>80	20

TECHNICAL INFORMATION

Frequency(Hz)	50-60
Input Voltage(VAC)	200-265
Life Span(Hrs)	30000
Sensor	No
Ambient Temperature(Ta)	-20℃+50℃
Operating Temperature	-20℃+50℃
Product Face Size (mm)	127.5*50
Energy Usage	A+
Lumen Maintenance(lm)	800

DIMENSION DRAWINGS

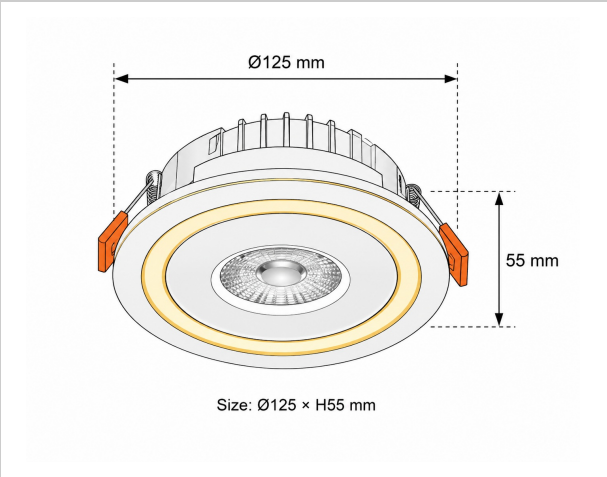

GENERAL INFORMATION

Body Material	Aluminium
Diffuser	PC
Mounting Type	Recessed
Cut Size(mm)	75
Chip Brand	Sanan

APPLICATION AREAS

- Café — Window Seating
- Hotel Guest Room — Luggage Alcove
- Residential Entryway — Console Table