





LINEAR LIGHT OFFICE PENDANT 40W LUMINATION

OVERVIEW

Linear Light is a modern lighting solution that combines high-efficiency LED illumination with integrated
air purification technology. Designed for clean, sleek aesthetics and optimal performance, this fixture enhances
both visibility and indoor air quality in a single unit.

PRODUCT VARIANTS & TECHNICAL DATA

Code	Type / Description	Wattage(W)	Total Luminous Flux(lm)	Luminous Efficacy(lm/W)	Power Factor(pf)	Beam Angle	CRI (Ra)	IP Rating
LKOS1L00403 UKOS1L00404 UKOS1L00406	2700K / 4000K / 6500K, Black, 100mm, Linear Light	40	2800	70	>0.5	120°	>70	20

TECHNICAL INFORMATION

Frequency(Hz)	50
Input Voltage(V)	220-260
Life Span(Hrs)	25000
IK	
Surge Protection(KV)	
Protection Class	
SDCM	<6
Sensor	No
Ambient Temperature(Ta)	
Operating Temperature	
UGR	
Product Face Size (mm)	100*1180*43
Product Weight (gr)	770
Energy Usage	A+
Lumen Maintenance(lm)	2800

INSTRUCTION

Instruction Manual	

DIMENSION DRAWINGS

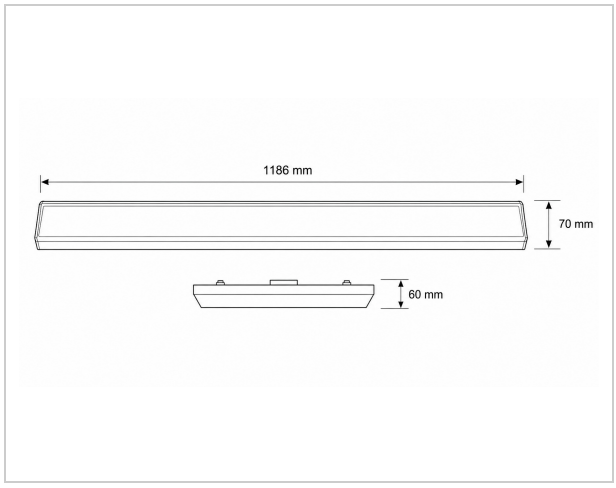

GENERAL INFORMATION

Body Material	
Diffuser	
Reflector	
Mounting Type	
Cut Size	
Driver Brand	
Chip Brand	
LED Type	

APPLICATION AREAS

- Schools
- Car Parking
- Warehouses
- Residential Building
- Commerical Buildings
- Garages and Workshops
- Industrial & Storage Facilities



