



LED MOVABLE SMD SPOT LIGHT 8W WHITE E3 LUMINATION

OVERVIEW

A compact and energy-efficient COB downlight with 8W power consumption, ideal for general and accent lighting. Delivers uniform, high-lumen output with minimal glare, perfect for modern interior lighting in residential and commercial spaces.

PRODUCT VARIANTS & TECHNICAL DATA

Code	Type / Description	Wattage(W)	Total Luminous Flux(lm)	Luminous Efficacy(lm/W)	Power Factor(pf)	Beam Angle	CRI (Ra)	IP Rating
UPD2E310083 UPD2E310086	2700K / 6500K, Down Light	8	260	70	>0.5	120°	>70	20

TECHNICAL INFORMATION

Frequency(Hz)	50
Input Voltage(VAC)	220-260
Life Span(Hrs)	25000
IK	
Surge Protection(KV)	
Protection Class	
SDCM	<6
Sensor	No
Ambient Temperature(Ta)	
Operating Temperature	
UGR	
Product Face Size (mm)	90*45
Product Weight (gr)	90
Energy Usage	A+
Lumen Maintenance(lm)	560

INSTRUCTION

Instruction Manual	

DIMENSION DRAWINGS

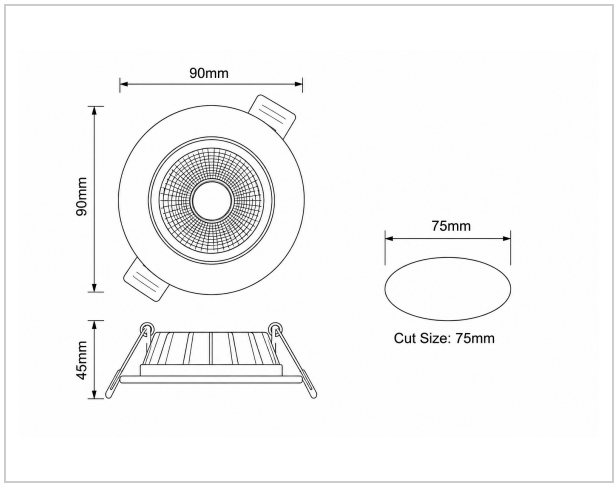

GENERAL INFORMATION

Body Material	PP
Diffuser	
Reflector	
Mounting Type	Recessed
Cut Size	70-75
Driver Brand	
Chip Brand	
LED Type	

APPLICATION AREAS

- Artwork or Feature Wall
- Product Display Wall
- Reception and Decorative Display Area
- Residential Building
- Commerical Buildings