





COB DOWNLIGHT 8W E3 LOOX

OVERVIEW

A recessed adjustable spotlight designed to provide focused illumination while maintaining a clean ceiling appearance. Its tilting optical module directs light toward selected objects and surfaces, providing greater control over the illuminated area. The main advantage is flexible aiming without changing the fixture position, making it suitable for accent and task lighting in residential, retail and hospitality interiors.

PRODUCT VARIANTS & TECHNICAL DATA

Code	Type / Description	Wattage(W)	Total Luminous Flux(lm)	Luminous Efficacy(lm/W)	Power Factor(pf)	Beam Angle	CRI (Ra)	IP Rating
LPD2E3L0081 LPD2E3L0083 LPD2E3L0084 LPD2E3L0086	3CCT / 2700K / 4000K / 6500K, Black, Down Light	8	720	90	>0.5	120°	>70	20

TECHNICAL INFORMATION

Frequency(Hz)	50-60
Input Voltage(VAC)	220-260
Life Span(Hrs)	30000
Sensor	No
Ambient Temperature(Ta)	-20° , +50°
Operating Temperature	-20° , +50°
Product Face Size (mm)	95*70
Product Weight (gr)	120
Energy Usage	A+
Lumen Maintenance(lm)	720

DIMENSION DRAWINGS

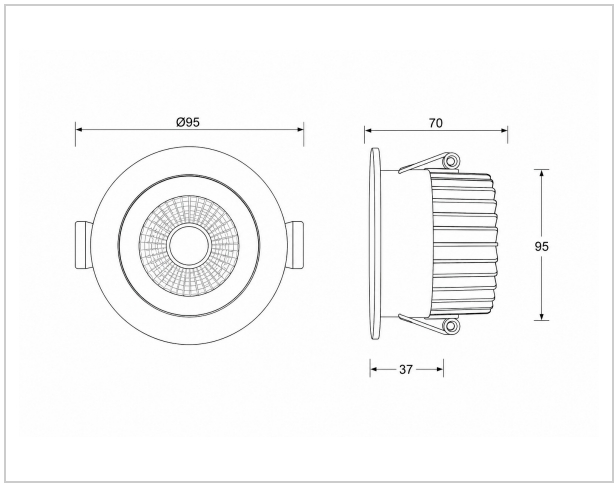

GENERAL INFORMATION

Body Material	Iron
Mounting Type	Recessed
Cut Size	75

APPLICATION AREAS

- Artwork or Feature Wall
- Product Display Wall
- Reception and Decorative Display Area







