





TRACK LIGHT 30W LUMINATION(DOUBLE LINE)

OVERVIEW

Features:

*High-performance 30W LED spotlight designed for premium retail displays.

*Delivers powerful, focused illumination to highlight product details.

*The perfect lighting solution for showcases, jewelry stores, and galleries.

PRODUCT VARIANTS & TECHNICAL DATA

Code	Type / Description	Wattage(W)	Total Luminous Flux(lm)	Luminous Efficacy(lm/W)	Power Factor(pf)	Beam Angle	CRI (Ra)	IP Rating
UIRB0000303 UIRL0000304 UIRL0000306	3000K / 4000K / 6500K, Black, Spot Light	30	3000	80	>0.5	30°	>70	20

TECHNICAL INFORMATION

Frequency	50
Input Voltage	220-260
Life Span	25000
IK	
Surge Protection	
Protection class	
SDCM	<6
Sensor	No
Warranty	2
Ambient temperature(Ta)	
Operating temperature	
UGR	
Product Face Size (mm)	74*168
Product Weight (gr)	203
Energy Usage	A
Lumen Maintenance	2400

DIMENSION DRAWINGS

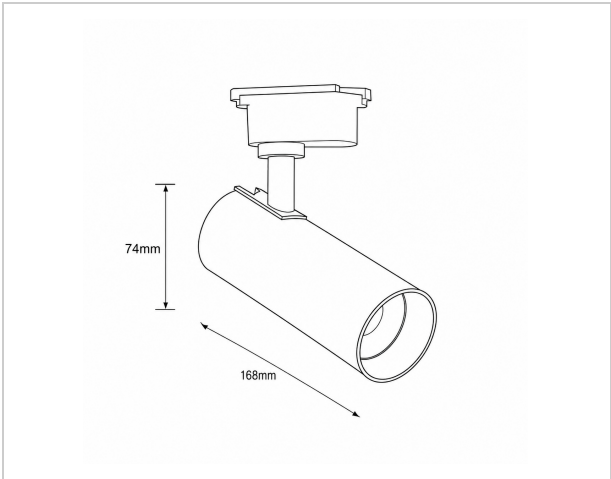

GENERAL INFORMATION

Body Material	Aluminium
Diffuser	PC
Reflector	
Mounting Type	Rail
Cut Size	
Driver Brand	
Chip Brand	
LED Type	

APPLICATION AREAS

- Schools
- Car Parking
- Warehouses
- Residential Building
- Commerical Buildings
- Industrial & Storage Facilities