







BULKHEAD LIGHT 25W ROUND LOOX

OVERVIEW

A durable emergency wall-mounted LED luminaire designed to provide reliable general and backup illumination for circulation and utility areas. It delivers uniform, comfortable light for everyday use while supporting continued visibility during power interruptions through its integrated emergency function. Its main advantage is the combination of robust outdoor protection, efficient performance, and emergency lighting capability in one compact fixture. Suitable for residential common areas, hospitality, and light-industrial environments.

PRODUCT VARIANTS & TECHNICAL DATA

Code	Type / Description	Wattage(W)	Total Luminous Flux(lm)	Luminous Efficacy(lm/W)	Power Factor(pf)	Beam Angle	CRI (Ra)	IP Rating
LCLMSIPW253 LCLMSIPW254 LCLMSIPW256	3000K / 4000K / 6500K, Emergency & MW Sensor	25W	2625lm	105	>0.95	120°	>80	65

TECHNICAL INFORMATION

Frequency(Hz)	50
Input Voltage(V)	180-265
Life Span(Hrs)	50000
IK	08
Sensor	Emergency + Microwave Sensor
Ambient Temperature(Ta)	-20℃+85℃
Product Face Size (mm)	∅280*H70
Product Weight (gr)	812
Energy Usage	A+
Lumen Maintenance(lm)	2625

INSTRUCTION

Instruction Manual	

PHOTOMETRIC DIAGRAMS

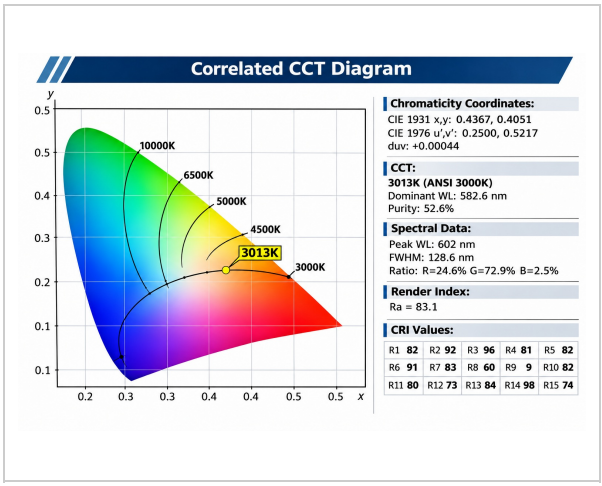

Chromaticity / CCT diagram

DIMENSION DRAWINGS

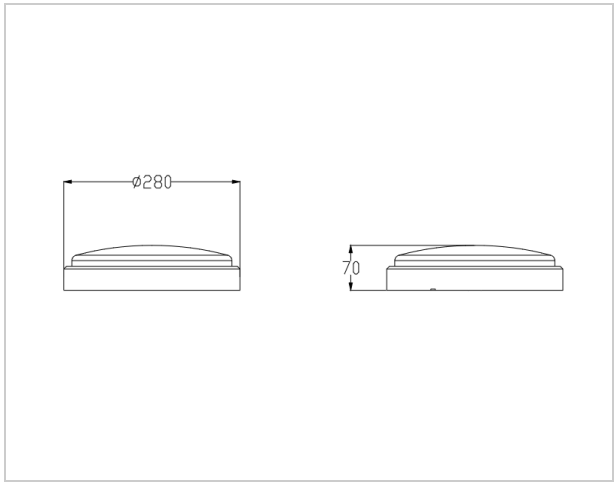

GENERAL INFORMATION

Body Material	Anti-UV PC
Diffuser	Anti-UV PC
Mounting Type	Ceiling - Wall
Cut Size(mm)	∅280*H70
LED Type	SMD

APPLICATION AREAS

- Retail & Showrooms: Displays, shelves, product walls, boutiques
- Hotels & Hospitality: Receptions, corridors, lounges, guest areas
- Residential: Living rooms, kitchens, dining areas, corridors, feature walls

