



SPOT LIGHT9W GU10 CLEAR

OVERVIEW

A compact LED spotlight lamp designed for compatible GU10 fixtures, providing directional illumination for selected areas and visual features. Its reflector-style optical design helps place light where it is needed, supporting focused lighting with a clean ceiling appearance. Easy lamp replacement and flexible use across different fixtures make it a practical choice for residential, retail and hospitality interiors.

PRODUCT VARIANTS & TECHNICAL DATA

Code	Type / Description	Wattage(W)	Total Luminous Flux(lm)	Luminous Efficacy(lm/W)	Beam Angle	CRI (Ra)	Power Factor(pf)	IP Rating
LLSGPW00097 LLSGPW00099 LLSGPW00093 LLSGPW00094 LLSGPW00096	3CCT Wall Switch / 3CCT DIP Switch / 3000K / 4000K / 6500K, On/Off Driver	9	850±10%	95	38°	90	0.5	20

TECHNICAL INFORMATION

Frequency(Hz)	50
Input Voltage(V)	165-265V
Life Span(Hrs)	30000
Ambient Temperature(Ta)	-15℃+55℃
Operating Temperature	-15℃+55℃
Product Face Size (mm)	50*56

APPLICATION AREA

Warehouses	
Residential Building	
Commerical Buildings	

INSTRUCTION

Instruction Manual	

DIMENSION DRAWINGS

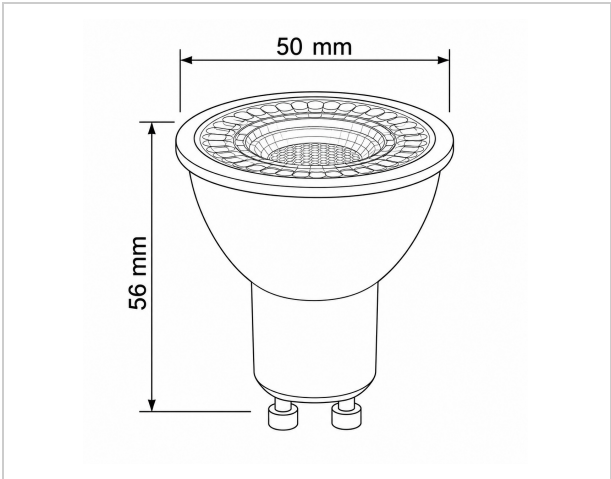

GENERAL INFORMATION

Body Material	PA+ALU
Diffuser	PC