



LINEAR LIGHT 30W IP65 RAIN SERIES LOOX

OVERVIEW

Linear Light 30w IP65 Rain Series Loox is a durable, energy-efficient LED fixture designed to resist dust and water, making it ideal for outdoor and damp environments

PRODUCT VARIANTS & TECHNICAL DATA

Code	Type / Description	Wattage(W)	Total Luminous Flux(lm)	Luminous Efficacy(lm/W)	Power Factor(pf)	Beam Angle	CRI (Ra)	IP Rating
LKN06IP0304 LKN06IP0306	4000K / 6500K, Linear Light	30	3000	100	>0.5	120	>70	65

TECHNICAL INFORMATION

Frequency(Hz)	50
Input Voltage(V)	220-260
Life Span(Hrs)	30000
IK	
Surge Protection(KV)	
Protection Class	
SDCM	4>
Sensor	No
Ambient Temperature(Ta)	-20° , +50°
Operating Temperature	-20° , +50°
UGR	
Product Face Size (mm)	600*69*40
Product Weight (gr)	160
Energy Usage	A
Lumen Maintenance(lm)	3000

INSTRUCTION

Instruction Manual	

DIMENSION DRAWINGS

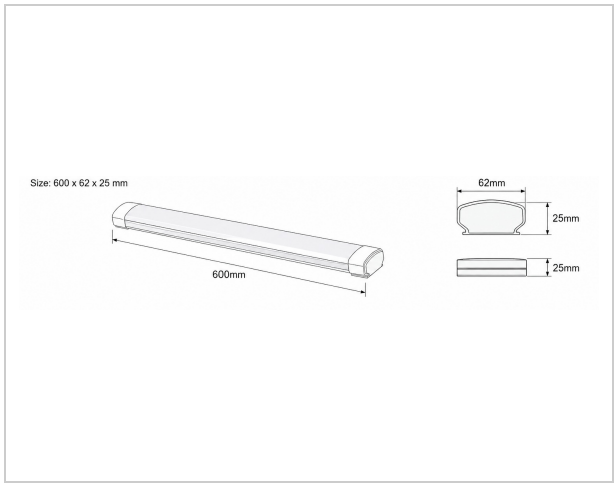

GENERAL INFORMATION

Body Material	PC
Diffuser	
Reflector	
Mounting Type	Surface
Cut Size	
Driver Brand	
Chip Brand	
LED Type	

APPLICATION AREAS

- Schools
- Car Parking
- Warehouses
- Residential Building
- Commerical Buildings
- Garages and Workshops
- Industrial & Storage Facilities

3 YEARS GUARANTEE
ISO 9001:2015
CE
ISO 14001:2015