



SINGLE TUBE HOUSING 1200MM LOOX

OVERVIEW

A durable, slim-design surface-mounted housing designed to accommodate a single LED tube. Featuring a sturdy grey body, transparent ribbed diffuser, and secure fastening clips for easy installation and maintenance.

PRODUCT VARIANTS & TECHNICAL DATA

Code	Type / Description	IP Rating
LKC11PS0000	Tube Light, PS	54

TECHNICAL INFORMATION

Warranty	2
Product Face Size (mm)	127*7*6

DIMENSION DRAWINGS

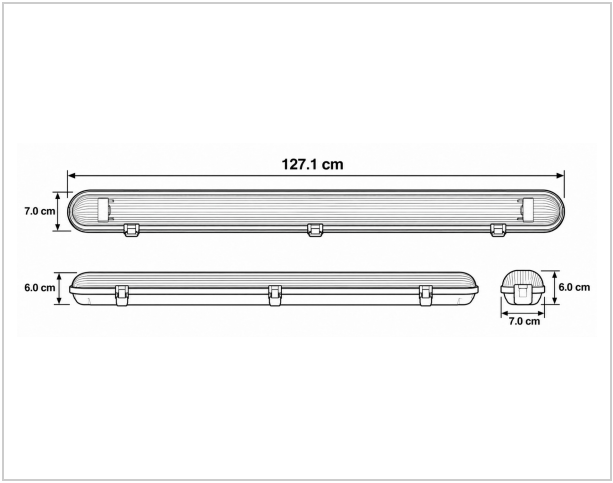

GENERAL INFORMATION

Body Material	PS
Mounting Type	Surace

2 YEARS GUARANTEE