



MAGNETIC FROSTED LINEAR LIGHT M30 12W LOOX

OVERVIEW

The LOOX M30 12W Magnetic Frosted Linear Light features a sleek, modern design with a frosted diffuser that provides soft, uniform illumination and reduces glare. Designed for M30 magnetic track systems, it offers flexible installation and a clean architectural appearance. Ideal for offices, living rooms, retail stores, showrooms, and commercial interiors, delivering energy-efficient lighting with a minimalist finish.

PRODUCT VARIANTS & TECHNICAL DATA

Code	Type / Description	Wattage(W)	Total Luminous Flux(lm)	Power Factor(pf)	Beam Angle	CRI (Ra)	IP Rating
LIMFM30L123 LIMFM30L124	Black, 3000K / 4000K	12W	720LM	>0.5	120	>90	IP20

TECHNICAL INFORMATION

Frequency(Hz)	50Hz
Voltage(V)	DC48V
Product Face Size (mm)	18*300*30MM
Life Time(hrs)	30000HRS
SDCM	<7

DIMENSION DRAWINGS

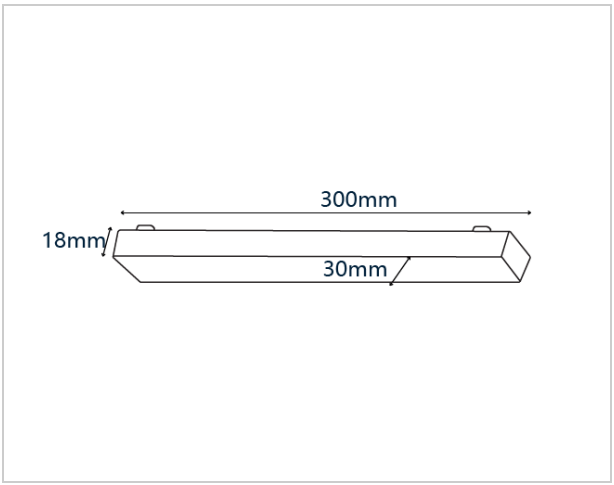

GENERAL INFORMATION

Body Material	Aluminum
Mounting Type	Surface

APPLICATION AREAS

- Schools
- Car Parking
- Warehouses
- Residential Building
- Industrial & Storage Facilities