



MAGNETIC ADJUSTABLE GRILL LINEAR LIGHT M30 12W LOOX

OVERVIEW

The LOOX M30 12W Magnetic Adjustable Grill Linear Light features a slim, modern design with recessed LED lenses for focused, low-glare illumination. Its adjustable structure allows flexible beam direction to highlight specific areas or architectural features. Designed for M30 magnetic track systems, it offers easy installation and versatile positioning. Ideal for offices, showrooms, retail stores, galleries, and residential interiors, combining energy efficiency with a sleek architectural appearance.

PRODUCT VARIANTS & TECHNICAL DATA

Code	Type / Description	Wattage(W)	Total Luminous Flux(lm)	Luminous Efficacy(lm/W)	Power Factor(pf)	Beam Angle	CRI (Ra)	IP Rating
LIMG230L123 LIMG230L124	Black, 3000K / 4000K	12W	780LM	65LM/W	0.5	24	>90	IP20

TECHNICAL INFORMATION

Frequency(Hz)	50Hz
Voltage(V)	DC48V
Product Face Size (mm)	220*30*18MM
Life Time(hrs)	30000HRS
SDCM	<7

DIMENSION DRAWINGS

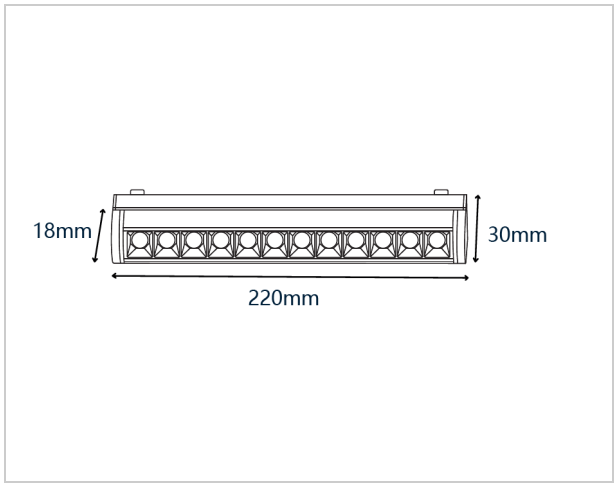

GENERAL INFORMATION

Body Material	Aluminum
Mounting Type	Surface

APPLICATION AREAS

- Schools
- Car Parking
- Warehouses
- Residential Building
- Industrial & Storage Facilities