



MAGNETIC ANTI-GLARE HONEYCOMB LINEAR LIGHT M30 16W 4CCT LOOX

OVERVIEW

The LOOX M30 16W Magnetic Anti-glare Honeycomb Linear Light features a sleek, modern design with a precision honeycomb grille that minimizes glare and delivers comfortable, uniform illumination. Equipped with 4CCT selectable color temperatures, it offers flexible lighting options for different environments. Designed for M30 magnetic track systems, it provides easy installation and flexible positioning. Ideal for offices, conference rooms, retail stores, showrooms, hotels, and residential interiors, combining energy efficiency with elegant architectural lighting.

PRODUCT VARIANTS & TECHNICAL DATA

Code	Type / Description	Wattage(W)	Total Luminous Flux(lm)	Power Factor(pf)	Beam Angle	CRI (Ra)	IP Rating
LIMGG30L168	Black, 4CCT DIP Switch	16W	320LM	0.5	120	>90	IP20

TECHNICAL INFORMATION

Frequency(Hz)	50Hz
Voltage(V)	DC48V
Product Face Size (mm)	220*30*25MM
Life Time(hrs)	30000HRS
SDCM	<7

DIMENSION DRAWINGS

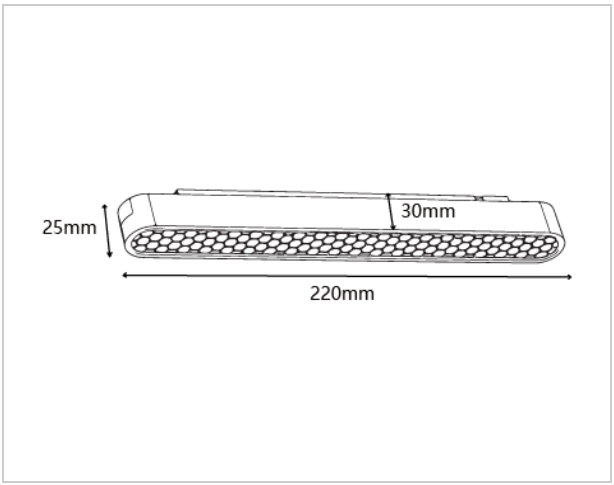

GENERAL INFORMATION

Body Material	Aluminum
Mounting Type	Surface

APPLICATION AREAS

- Schools
- Car Parking
- Warehouses
- Residential Building
- Industrial & Storage Facilities