





FLOOD LIGHT 200W LOOX PRO

OVERVIEW

A practical outdoor lighting solution designed to provide broad and consistent illumination. It improves visibility and security around exterior spaces while delivering reliable, energy-efficient performance with minimal maintenance. Suitable for building entrances, parking areas, garages, workshops, gardens and other outdoor applications.

PRODUCT VARIANTS & TECHNICAL DATA

Code	Type / Description	Wattage(W)	Total Luminous Flux(lm)	Luminous Efficacy(lm/W)	Power Factor(pf)	Beam Angle	CRI (Ra)	IP Rating
LIF10G02009 LIF10G02006	3CCT DIP Switch / 6500K, Flood Light, Gray, With Bracket	200W	20000	100	0.9	120°	>80	65

TECHNICAL INFORMATION

Frequency(Hz)	50-60
Voltage(V)	180-265
Life Time(hrs)	30000
IK	06
Surge Protection(KV)	4
Sensor	No
Ambient Temperature(Ta)	-20℃+50℃
Product Face Size (mm)	313.7*236.7*31
Energy Label Grade	C

INSTRUCTION

Instruction Manual	

PHOTOMETRIC DIAGRAMS

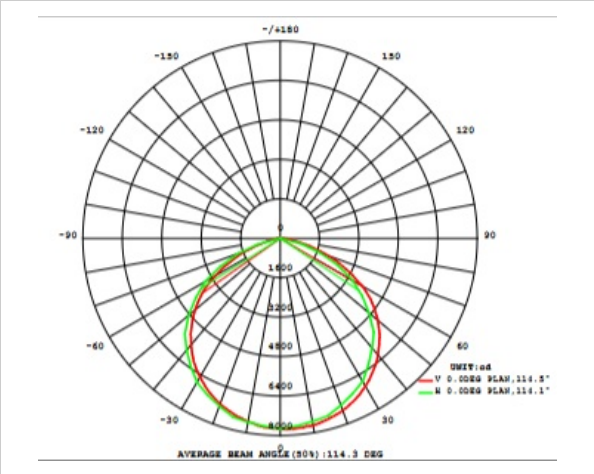

Beam angle / polar diagram

DIMENSION DRAWINGS

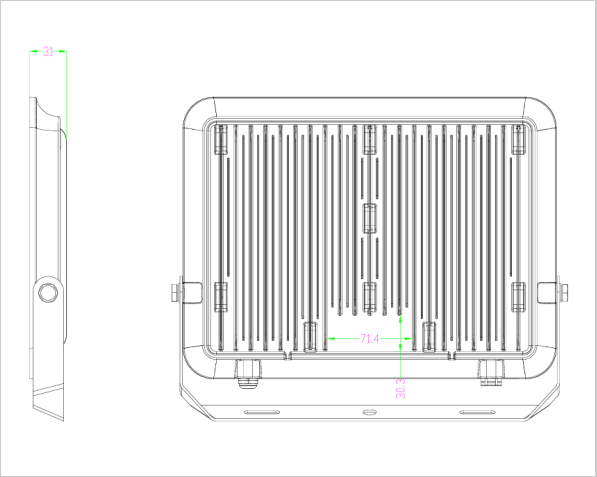

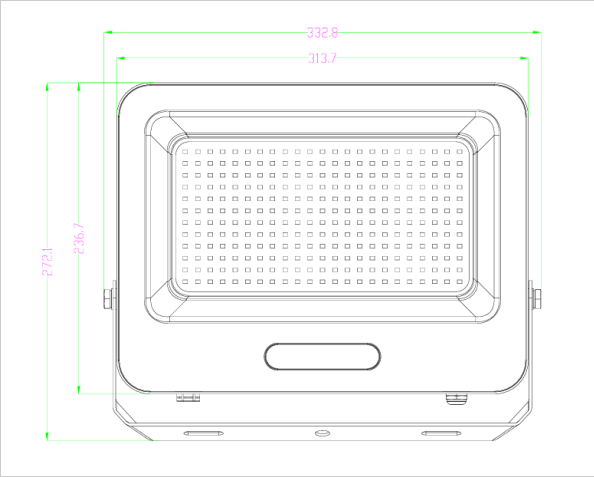

GENERAL INFORMATION

Body Material	Aluminum
Diffuser	Frosted
Mounting Type	Adjustable Mounting Bracket

APPLICATION AREAS

- Hotels and Resorts: hotel and villa entrances, driveways, gardens and outdoor common areas
- Landscape lighting: Open Landscapes, Large Garden Areas,etc.
- Commercial & Public Areas: parking areas, playgrounds, building façades and service areas


















