





STREET LIGHT 120W ST-URBANTECH LOOX

OVERVIEW

The ST-UrbanTech Street Light is engineered to provide high-performance illumination with superior road visibility and long-lasting reliability. Designed for modern urban spaces, residential areas, and highways, this luminaire ensures uniform light distribution, energy efficiency, and durability. Available in multiple wattage and CCT options, it offers flexible solutions to meet diverse outdoor lighting needs while enhancing safety and comfort in every environment.

Features:

• The power supply adopts a modular design, which can be quickly replaced, reducing maintenance costs.

• The sleeve adopts a universal design, the same sleeve can be compatible with both horizontal and vertical installation, and the angle can be adjusted by plus or minus 15 degrees.

PRODUCT VARIANTS & TECHNICAL DATA

Code	Type / Description	Wattage(W)	Total Luminous Flux(lm)	Luminous Efficacy(lm/W)	Power Factor(pf)	CRI (Ra)	IP Rating
LIS1STY1203 LIS1STY1204 LIS1STY1206	3000K / 4000K / 6500K, Street Light, Dimmable Driver	120W	1600	140	0.95	>70	66

TECHNICAL INFORMATION

Frequency(Hz)	50-60

INSTRUCTION

Instruction Manual	

DIMENSION DRAWINGS

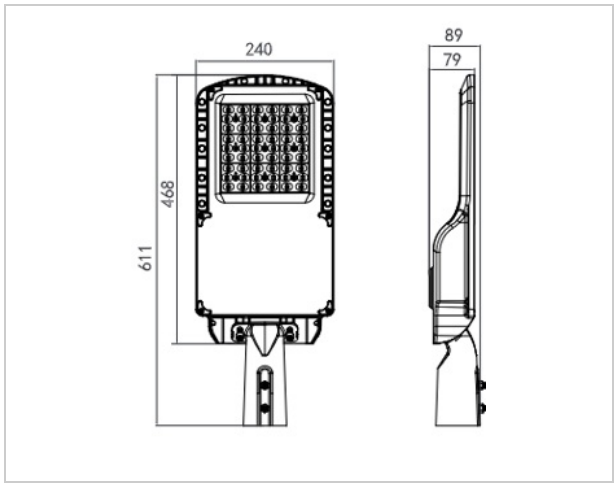

GENERAL INFORMATION

Body Material	ADC12 Aluminum
Diffuser	
Reflector	
Mounting Type	
Cut Size	
Driver Brand	Philips / Sosen
Chip Brand	Lumiled
Light Source	SMD
Cable & Gland Type	

APPLICATION AREAS

- Parking areas
- Villa Walkways
- Garages and Workshops
- Landscape lighting
- Commerical and Resindential Entrances
- Mosques & landmarks
- Building façades
- Industrial & Storage Facilities






