



GLASS T8 TUBE 26W LUMINATION

OVERVIEW

The T8 Glass LED Tube offers a high-efficiency lighting solution designed to replace traditional fluorescent tubes. With a wide 300° beam angle and reliable 2470 lumen output, it delivers consistent, energy-saving illumination for a variety of indoor spaces.

PRODUCT VARIANTS & TECHNICAL DATA

Code	Type / Description	Wattage(W)	Total Luminous Flux(lm)	Luminous Efficacy(lm/W)	Power Factor(pf)	Beam Angle	CRI (Ra)	IP Rating
UKT12G10263 UKT12G10266	2700K / 6500K, Tube Light	26W	2470	95	>0.5	280°	>70	20

TECHNICAL INFORMATION

Frequency(Hz)	
Input Voltage(V)	165-265V
Life Span(Hrs)	25000
IK	
Surge Protection(KV)	
Protection Class	
SDCM	<5
Sensor	No
Ambient Temperature(Ta)	
Operating Temperature	
UGR	
Product Face Size (mm)	L1213* φ28mm
Energy Usage	
Lumen Maintenance(lm)	2470

PHOTOMETRIC DIAGRAMS

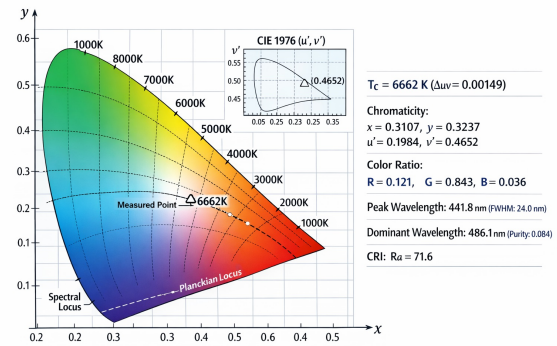

Chromaticity / CCT diagram

DIMENSION DRAWINGS

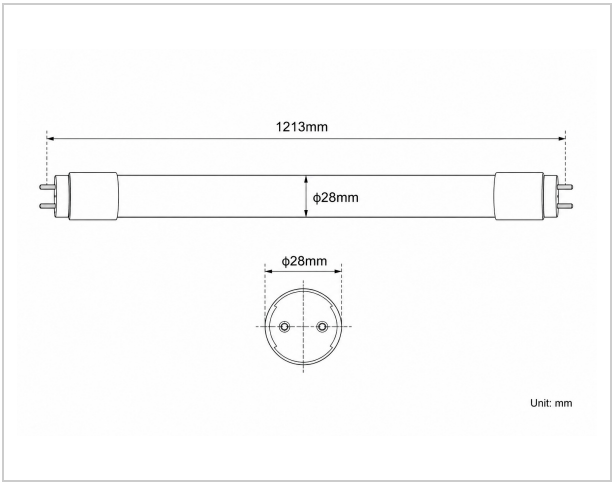

GENERAL INFORMATION

Body Material	Glass + PC Holder
Mounting Type	Holder
Driver Brand	No
Chip Brand	No

APPLICATION AREAS

- Schools
- Car Parking
- Warehouses
- Residential Building
- Commerical Buildings
- Garages and Workshops
- Industrial & Storage Facilities

