







# DOUBLE PENDANT LIGHT 24W SERIES ARTIVIA - M2 LOOX PLUS

## OVERVIEW

The ARTIVIA Double Pendant Light combines two suspended light heads within a single ceiling fixture to provide focused illumination with a clean architectural appearance. Its twin-light design helps define tables, kitchen islands and counters while reducing the need for multiple separate fixtures, making it well suited to residential, hospitality, café and commercial interiors.

## PRODUCT VARIANTS & TECHNICAL DATA

| Code | Type / Description | Wattage(W) | Total Luminous Flux(lm) | Luminous Efficacy(lm/W) | Power Factor(pf) | Beam Angle | CRI (Ra) | IP Rating |
|---|---|---|---|---|---|---|---|---|
| LDH18MSG244 | 4000K, Gray, Pendant Light, Eaglerise Driver | 24W | 2400 | 100 | >0.5 | 36° | >90 | 54 |

## TECHNICAL INFORMATION

| | |
|---|---|
| **Frequency** | 50-60 Hz |
| **Input Voltage** | 220-240 VAC |
| **Life Span** | 50000 H |
| **Protection class** | Class II |
| **SDCM** | < 2 |
| **Sensor** | No |
| **Ambient temperature(Ta)** | -15℃+55℃ |
| **Operating temperature** | -15℃+45℃ |
| **UGR** | <17 |
| **Product Face Size (mm)** | 284*1015*72 |
| **Product Weight (gr)** | 772 |
| **Energy Usage** | A+ |
| **Lumen Maintenance (L70)** | 2400 |

## INSTRUCTION

| | |
|---|---|
| **Instruction Manual** | |

## PHOTOMETRIC DIAGRAMS

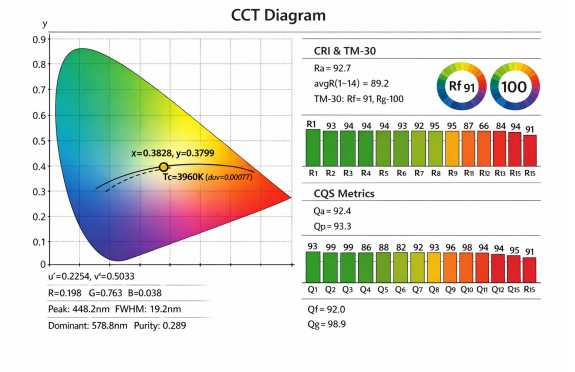


*Chromaticity / CCT diagram*

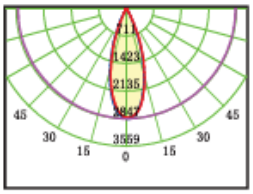


*Beam angle / polar diagram*

## DIMENSION DRAWINGS

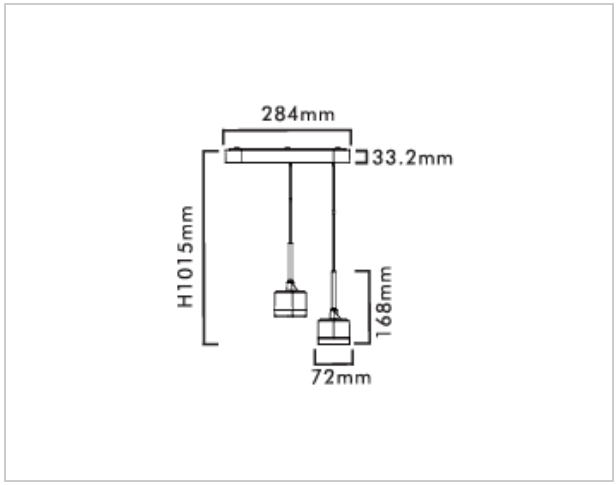

## GENERAL INFORMATION

| | |
|---|---|
| **Body Material** | Die-Cast Aluminum |
| **Diffuser** | PC |
| **Reflector** | PC |
| **Mounting Type** | Surface |
| **Driver Brand** | Eaglerise/Philips |
| **Chip Brand** | Osram/Philips |
| **LED Type** | COB |

## APPLICATION AREAS

- Residential Buildings: Dining Tables, Kitchen Islands, etc.
- Restaurants & Cafés: Dining Tables, Café Counters, Bar Counters, Communal Tables, etc.
- Commercial Buildings: Reception Desks, Customer Counters, Waiting-Lounge Tables, Feature Zones, Consultation Areas, etc.